Italgroup®
HYDRAULIC MOTORS
ITALY

IAMD 6000-6500-6800-7600-8000 H8 D200

INSTALLATION DRAWING

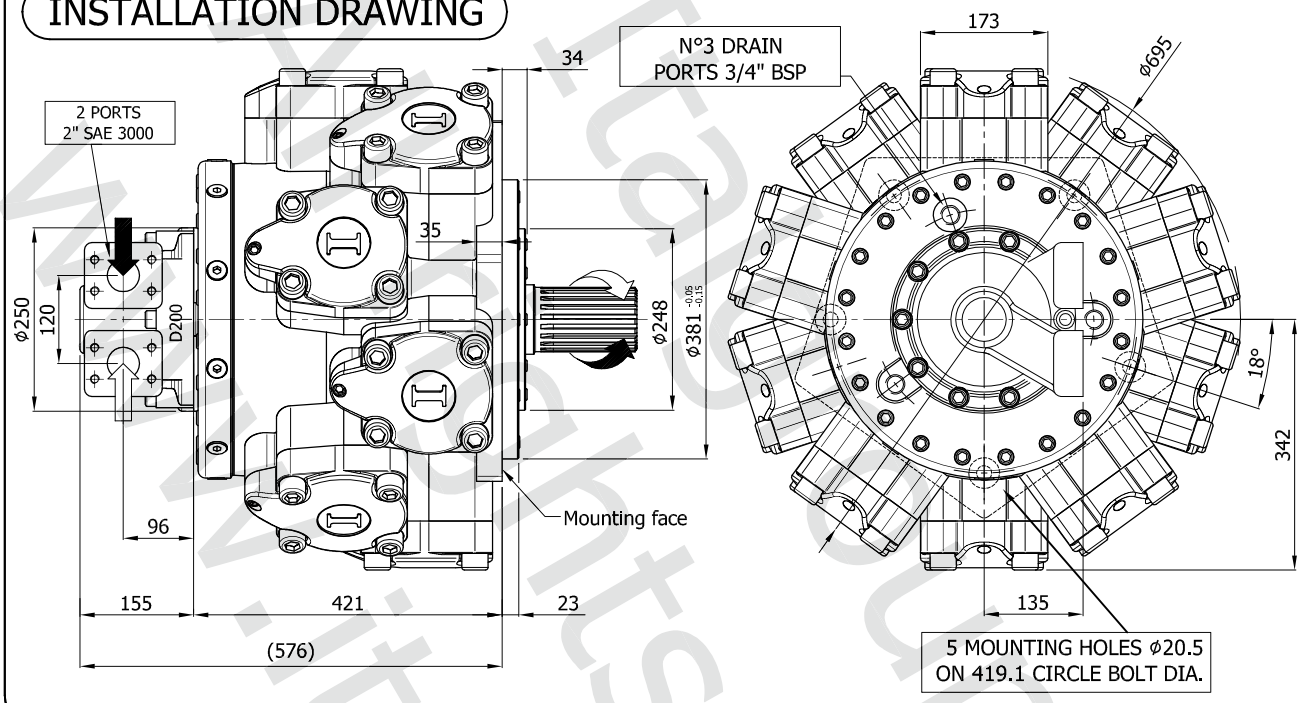

TECHNICAL DATA

		6000	6500	6800	7600	8000
DISPLACEMENT	[cc]	5966	6581	6962	7620	8062
SPECIFIC TORQUE	[Nm/bar]	95	104.7	110.8	121.3	128.3
MAX. CONT. PRESSURE	[bar]	250	250	250	190	180
MAX. INT. PRESSURE	[bar]	290	290	290	230	220
PEAK PRESSURE	[bar]	350	350	350	290	280
MAX. CONT. SPEED	[rpm]	120	120	120	90	80
PEAK SPEED (**)	[rpm]	140	140	140	100	90
MAX. CONT. POWER (***)	[kW]	190	190	190	190	190
MAX. POWER (****)	[kW]	215	215	215	215	215
MAX. CASE PRESSURE	[bar]	6	6	6	6	6
MAX. BACK PRESSURE	[bar]	70	70	70	70	70
DRY WEIGHT	[kg]	590	590	590	590	590
TEMPERATURE RANGE (*)	[°C]	-30÷70	-30÷70	-30÷70	-30÷70	-30÷70

(*) Please refer to the "Hydraulic fluid recommendations"
(**) Do not exceed maximum power
(***) At maximum continuous power the motor flushing is required
(****) Permitted on a 15% duty cycle, for a maximum 5 min period

The data specified into the catalogue are for product description purpose only and must not be interpreted as warranted characteristics in legal sense. Italgroup S.r.l. reserves the right to implement modifications without notice. All partial or total reproduction and copy without written authorization of Italgroup S.r.l. is strictly forbidden.

SHAFT CONFIGURATIONS

A1

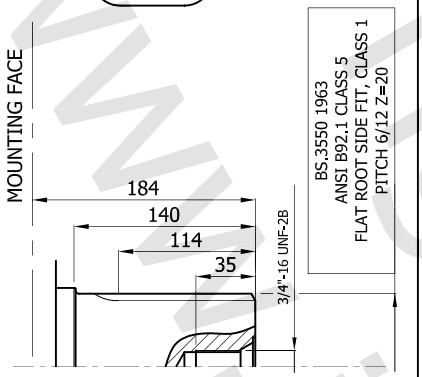

A11

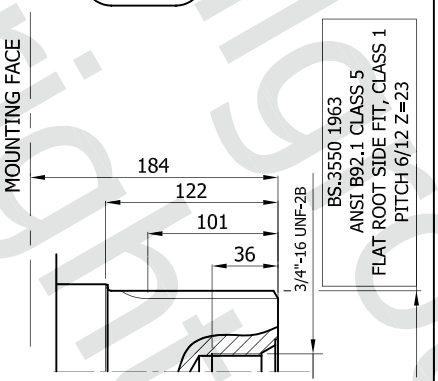

A5

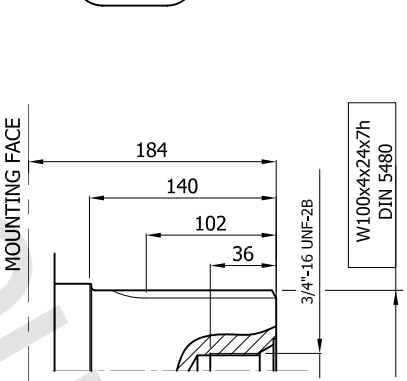

A2

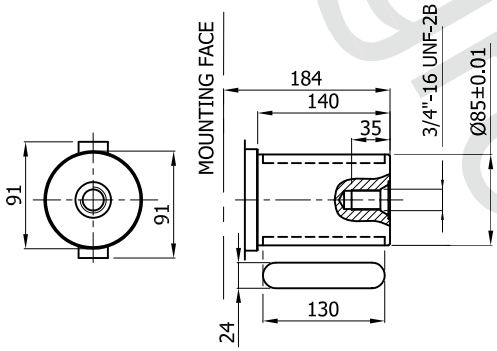

A22

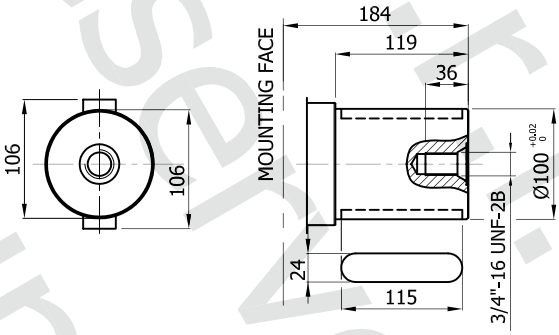

Italgroup S.r.l. All rights reserved www.italgroup.eu

The data specified into the catalogue are for product description purpose only and must not be interpreted as warranted characteristics in legal sense. Italgroup S.r.l. reserves the right to implement modifications without notice. All partial or total reproduction and copy without written authorization of Italgroup S.r.l. is strictly forbidden.

IAMD 6000/C-6500/C-6800/C-7600/C-8000/C H8 D200

INSTALLATION DRAWING

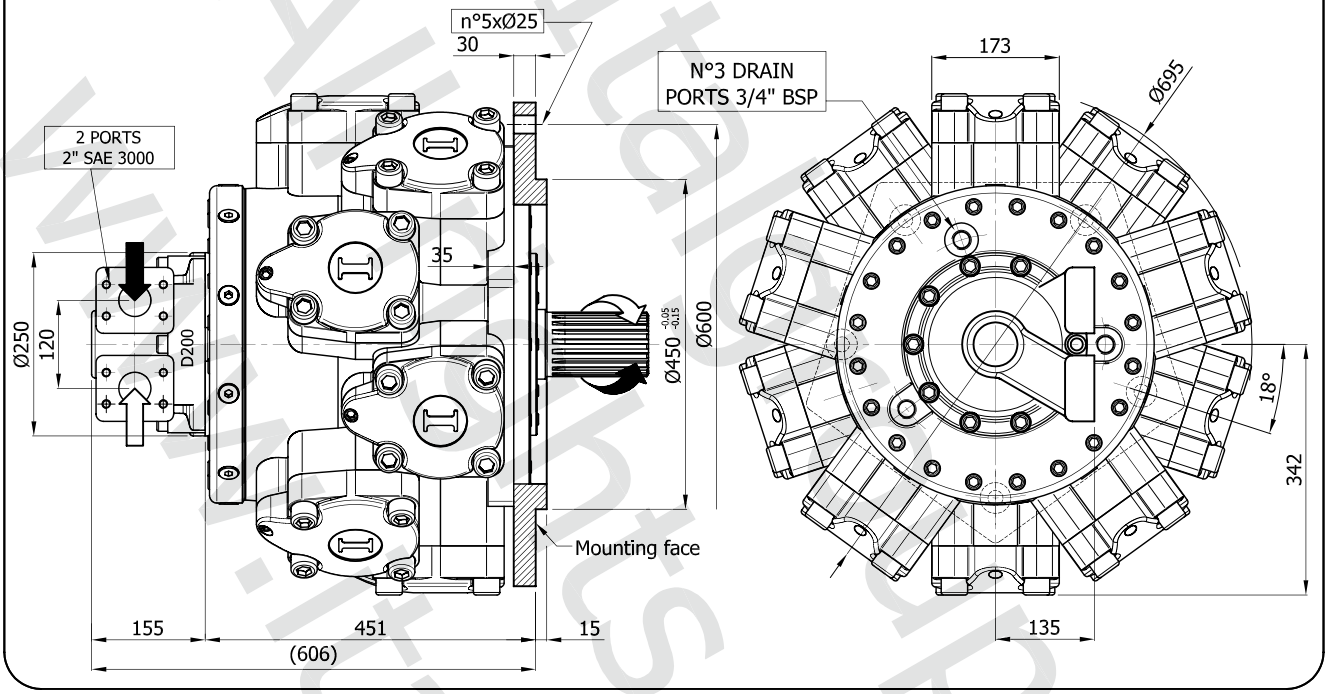

TECHNICAL DATA

		6000	6500	6800	7600	8000
DISPLACEMENT	[cc]	5966	6581	6962	7620	8062
SPECIFIC TORQUE	[Nm/bar]	95	104.7	110.8	121.3	128.3
MAX. CONT. PRESSURE	[bar]	250	250	250	190	180
MAX. INT. PRESSURE	[bar]	290	290	290	230	220
PEAK PRESSURE	[bar]	350	350	350	290	280
MAX. CONT. SPEED	[rpm]	120	120	120	90	80
PEAK SPEED (**)	[rpm]	140	140	140	100	90
MAX. CONT. POWER (***)	[kW]	190	190	190	190	190
MAX. POWER (****)	[kW]	215	215	215	215	215
MAX. CASE PRESSURE	[bar]	6	6	6	6	6
MAX. BACK PRESSURE	[bar]	70	70	70	70	70
DRY WEIGHT	[kg]	590	590	590	590	590
TEMPERATURE RANGE (*)	[°C]	-30÷70	-30÷70	-30÷70	-30÷70	-30÷70

(*) Please refer to the "Hydraulic fluid recommendations"
(**) Do not exceed maximum power
(***) At maximum continuous power the motor flushing is required
(****) Permitted on a 15% duty cycle, for a maximum 5 min period

Italgroup S.r.l. All rights reserved
www.italgroup.it

The data specified into the catalogue are for product description purpose only and must not be interpreted as warranted characteristics in legal sense. Italgroup S.r.l. reserves the right to implement modifications without notice. All partial or total reproduction and copy without written authorization of Italgroup S.r.l. is strictly forbidden.

SHAFT CONFIGURATIONS

A0

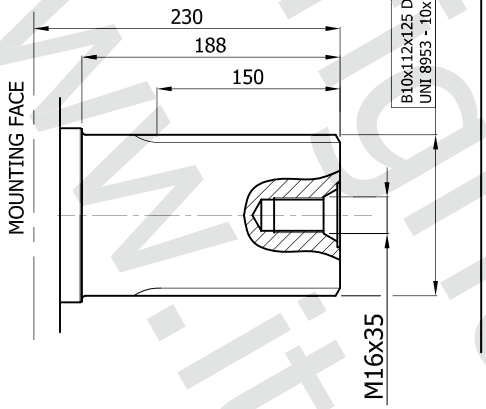

A2

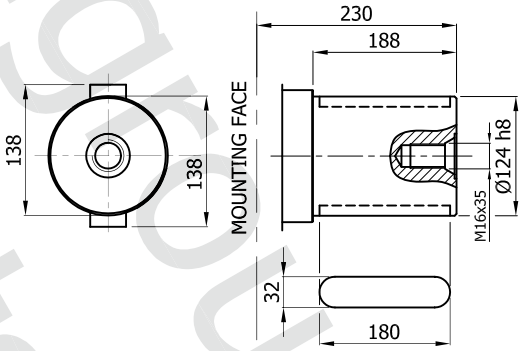

A3

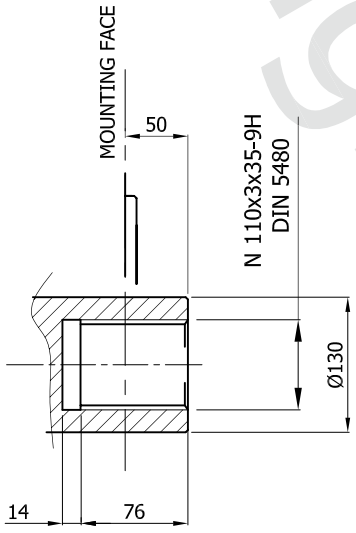

SPLINE BILLET

SB12

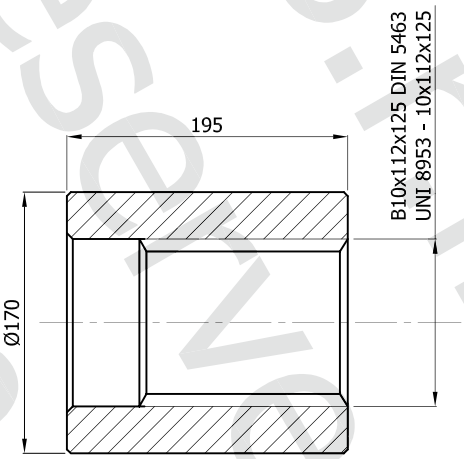

for IAMD H8/C A0

All rights reserved Italgroup S.r.l. www.italgroup.eu

The data specified into the catalogue are for product description purpose only and must not be interpreted as warranted characteristics in legal sense. Italgroup S.r.l. reserves the right to implement modifications without notice. All partial or total reproduction and copy without written authorization of Italgroup S.r.l. is strictly forbidden.